Electrolux PROFESSIONAL

ITEM #

MODEL #

NAME #

SIS #

AIA #

Frozen

Frozen granita dispenser with 2 bowls, electronic control with UK plug and UV light

562544 (IPRO2EUVR290) * NOT TRANSLATED *

Main Features

- Ideal for the production of slush.
- The ITANK ™ Technology prevents ice accumulation on the outer side of the bowl, reducing condensation and increasing the cooling power of the machine.
- Bowl shape allows a natural mixing action to ensure an optimum consistency of the product.
- Customizable lid merchandiser and back graphic.
- Daily and weekly machine programming functionality.
- The insulated tank guarantees higher cooling efficiency and lower effect of the external temperature on product's preparation and maintenance time reducing condense and draining; it is the best solution in hot climate conditions.
- Exclusive nUV LED system for bowl sanitation.

Construction

- Electronic control system and touch screen keypad.
- Sliding drip tray.

Sustainability

- When the product reaches the right consistency, an automatic stand-by mode activates in order to save energy and reduce CO2 emissions.

APPROVAL:

Electrolux PROFESSIONAL

Frozen
Frozen granita dispenser with 2 bowls, electronic control with UK plug and UV light

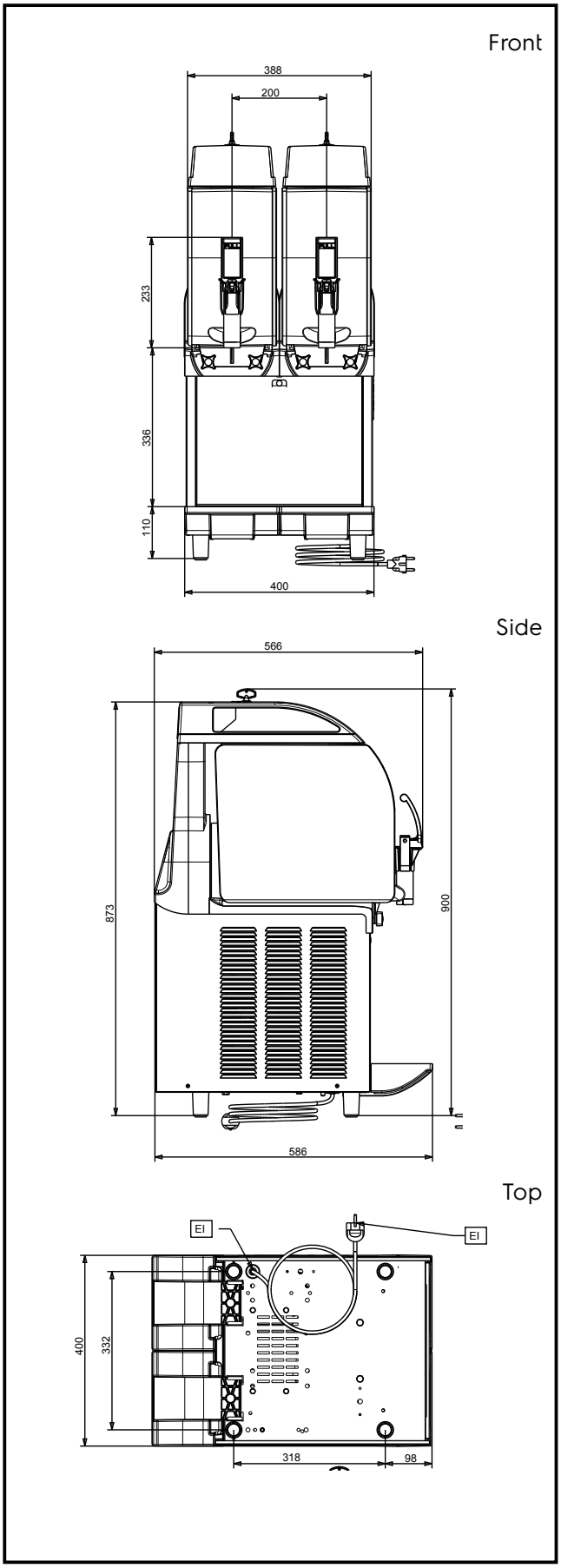

Frozen
Frozen granita dispenser with 2 bowls, electronic control with UK plug and UV light

The company reserves the right to make modifications to the products without prior notice. All information correct at time of printing.

2026.04.21

Electric

Supply voltage:	220-240 V/1 ph/50 Hz
Electrical power max.:	0.76 kW

Key Information:

Net weight:	60 kg

Sustainability

Refrigerant type:	R290
Refrigerant weight:	106 g

The company reserves the right to make modifications to the products without prior notice. All information correct at time of printing.